ArteCera

Feels as good as it looks.

TECHNICAL SPECIFICATION

AC500501W

S05 Coupled R/less WC W/Soft C Seat

Front / Side / Top View



Technical Drawing / Dimensions / Detail View

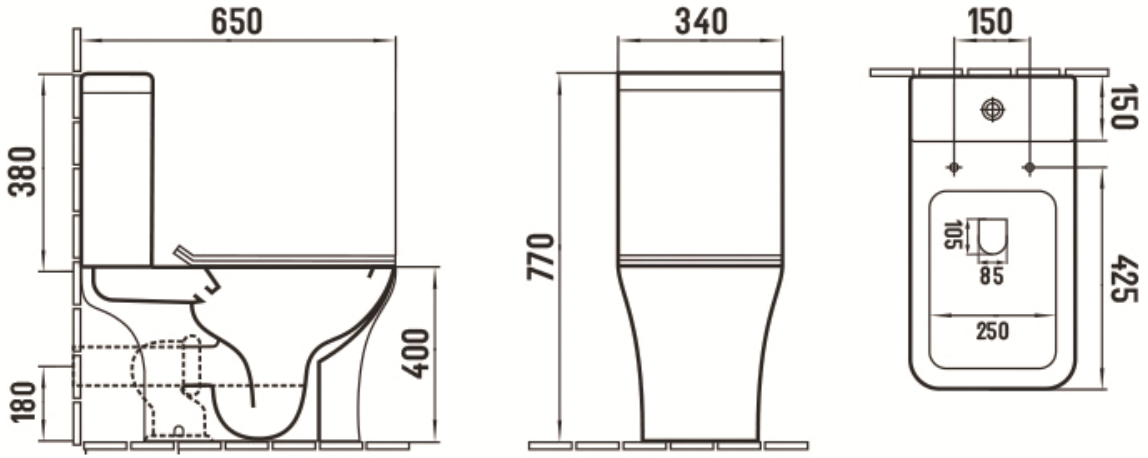

WATER INLET OPTIONS Water inlet is located on the left side.

Material	Shape	Colour	Features	Date	Sheet No.
Ceramic	Square	White	Rimless / Soft Closing Seats	04/11/2025	1